Ventrix 2120



Features

Key features:

- Intel® 12th Generation Core Processor family
- iAMT1 Support
- 15 year life cycle industrial components[2]
- PCIe rev. 4.0
- OEM Branding available
- Assembled and tested under ISO9001
- Made in the UK

Dimensions

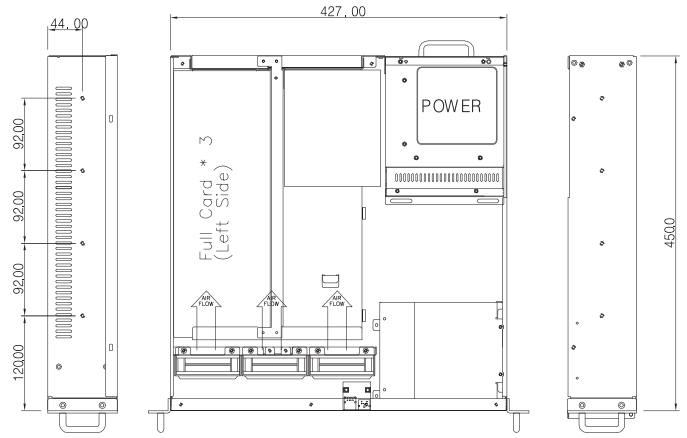

Left Inside View

Top View

Right View

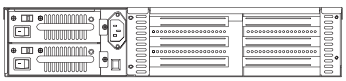

Rear out-side view

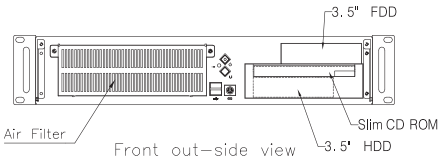

Front out-side view

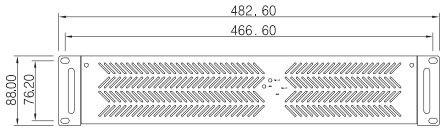

Front in-side view

Configuration shown is for illustration purposes only

Ventrix 2120

The information is believed to be accurate. However Amplicon Liveline Limited accepts no responsibility for any problems caused by errors and omissions. Specifications are subject to change without notice.

Specifications

Hardware Specification	Architecture: PICMG 1.3 Full length CPU: Intel® 12th Generation Core Processor Chipset: R680E Memory: Quad DDR5, maximum 128GB, Non-ECC Display: DVI-I, DP++ on header TPM 2.0 header Watch Dog Timer: 255 levels, 1 ~ 255 sec. Battery: Lithium 3V/220 mAH
BIOS	AMI UEFI
Storage	Options: 1 x M.2, M-Key (PCIe x4), 2280 2 x 3.5" HDD & 1 x Slim DVD or 2 x 2.5" HDD/SSD & 1 x Slim DVD Caddy options are available RAID support 0/1/5/10 via Intel® RST
System Expansion	1 x PCIe x16 1 x PCIe x1 2x PCI
Supported O/S	Windows 10 64-bit (Pro/IoT), Windows 11, Linux
External Interfaces	Front: 2 x USB 2.0 On/Off Switch, Reset Pwr/HDD LED Rear: 2 x 2.5GbE (RJ-45) 2 x USB 3.2 Gen 2 1 x DVI-I
Optional Breakout Interfaces (Will use 1 slot per breakout)	2 x RS-232, 2 x RS-232/422/485 4 USB 3.2 Gen 1x1 1 x DP++ Ps/2
LED's and Switches	Power (PC on) LED Hard Disk Drive access LED ATX system control switch System reset switch

Mechanical	Design: EIA RS-310C 19" rackmount standard Construction: Heavy duty cold rolled steel Colour: Black Dimensions (WxHxD mm): 483x88x450 Packaging Size (WxHxD mm): 630x248x574 Cooling: 3 x 50mm Fans (42.5CFM ech) Air Filter: Removable (washable)
Environmental Storage	Operating temperature: 0 to 60°C Storage temperature: -20 to 70°C Humidity: 5 to 90% at 25°C non-condensing
Certifications	CE/UKCA

2 = From hardware Mass Production