KwikDraw-A 17HD



Features

Key features:-

- 1U 17" widescreen LCD console drawer
- Support Full HD with 1080p resolution
- 104-key keyboard with touchpad or trackball
- New enhanced aesthetics with moulded front handle
- Short depth design of 480mm (18.9") only
- Front USB port for device access (USB hub KVM)
- 2 post rack mounting available

Dimensions

Left Side View



Front View

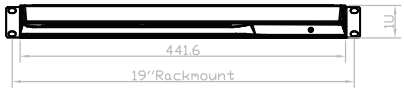

Top View

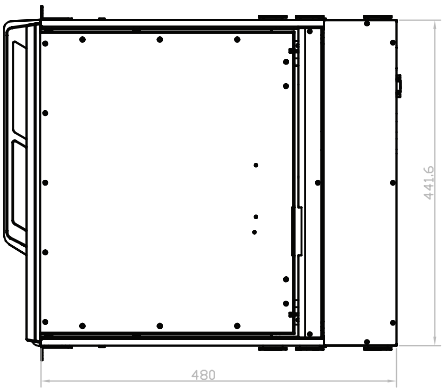

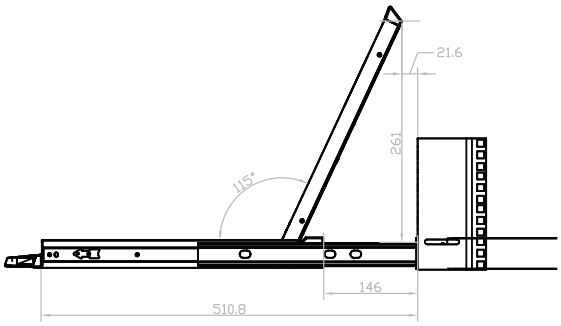

Unit : mm

KwikDraw-A 17HD

The information is believed to be accurate. However Amplicon Liveline Limited accepts no responsibility for any problems caused by errors and omissions. Specifications are subject to change without notice.

Specifications

LCD Panel	Size (diagonal): 17.3" widescreen TFT Max resolution: 1920 x 1080 Brightness (cd/m²): 400 Backlight: LED Colours: 16.7 M, 8-bit Contrast ratio (typ): 600 : 1 Viewing angle (H/V): 160° x 140°Active area (mm): 382 x 215 MTBF (hrs): 50,000 Signal input: VGA or HDMI
Casing Colour	Black (RAL 9005)
Weight	Net: 10.8kgs (24lbs) Gross: 15.8kgs (34.8lbs)
Dimensions (W x D x H)	Product: 441.6 x 480 x 44 mm (17.4 x 18.9 x 1.73 in) Packing: 590 x 808 x 140 mm (23.2 x 31.8 x 5.5 in)

Regulatory	Safety: FCC & CE certified Environmental: RoHS2 & REACH compliant
Power	Input: Auto-sensing 100 to 240VAC, 50 / 60Hz Consumption: Max. 14W (screen on), 2W (power saving mode / standby)
Environmental	Operating: 0 to 50°C Storage: -5 to 60°C Relative humidity: 5~90%, non-condensing Shock: 10G acceleration (11ms duration) Vibration: 5~500Hz 1G RMS random vibration